MAGNETOHYDRODYNAMICS Vol. 53 (2017), No. 2, pp. 429–438

NUMERICAL INVESTIGATION AND COMPARISON OF THE RECTANGULAR, CYLINDRICAL, AND HELICAL-TYPE DC ELECTROMAGNETIC PUMPS

*Geun Hyeong Lee, Hee Reyoung Kim**

Ulsan National Institute of Science and Technology, Ulsan 689-798, Republic of Korea

**Corresponding author: kimhr@unist.ac.kr*

Rectangular, cylindrical, and helical-type DC electromagnetic pumps with a low flowrate of 6 cc/s and a developed pressure of 10 bar were comparatively analyzed for a liquid lithium transportation system operating at a temperature of 300°C. The design variables for DC electromagnetic pumps with different types of geometries were optimized to attain the required flowrate and developed pressure. The relation between the developed pressure and the input current was analyzed for an incompressible liquid metal flow in the channels of all three types of DC electromagnetic pumps. Theoretical calculations showed that the helical-type DC electromagnetic pump, which had multiple connected ducts with parallel contacts for a reduced input current, needed 12% of the current of the rectangular- and cylindrical-type pumps to satisfy the hydrodynamic conditions, despite the more or less complex geometry.

Nomenclature.

B – magnetic flux density [T]
D – equivalent hydraulic diameter [m]
D_{i} – inner diameter of the pump duct [m]
D_{r} – diameter of the overall pump duct [m]
E_{p} – electromotive force [V]
F – force density [N/m^3]
f_{d} – Darcy friction factor
f_{r} – minor friction factor
H_{d} – pump duct height, except the wall thickness along the permanent-magnet direction [m]
i_{f} – fringe current [A]
i_{t} – total input current [A]
i_{p} – liquid metal flow current [A]
i_{s} – pump wall current vertical to the electrode stub direction [A]
i_{ver} – current vertical to the electrode stub direction [A]
J_{t} – total current density [A/m^2]
J_{e} – current density from the electrode stub [A/m^2]
K_{l} – loop friction loss factor
K_{L} – minor friction loss factor
L – length of the pump duct [m]
n_{t} – number of pump duct connections
n_{c} – number of electrode stubs
P – total developed pressure of the pump duct [Pa]
P_{h} – hydraulic pressure loss in the pump [Pa]
P_{e} – pressure loss due to the electromotive force [Pa]
P_{L} – developed pressure of pump duct due to the Lorentz force [Pa]

Q – flow rate [m^3/s]
Re – Reynolds number
R_f – fringe resistance [Ω]
R_o – outer resistance [Ω]
R_p – liquid lithium resistance [Ω]
R_s – pump wall resistance vertical to the electrode stub direction [Ω]
R_{ver} – resistance vertical to the electrode stub direction [Ω]
v – mean velocity of the fluid [m/s]
W_d – pump duct width, except the wall thickness along the electrode stub direction [m]
ε_s – roughness of liquid lithium [m]
ρ' – resistivity of liquid lithium [Ω·m]
ρ_{lit} – density of liquid lithium [kg/m^3]
σ – electrical conductivity of the material [$1/(\Omega\cdot m)$]

Introduction. Electromagnetic pumps have been used for transporting liquid metals having a high electrical conductivity. They have the advantages of no moving and sealing parts, eliminating the possibility of leakage and abrasion compared to mechanical pumps. In particular, DC electromagnetic pumps, which are used for various experimental purposes and have a low flowrate and different developed pressures, have the advantage of geometrical simplicity from a design aspect, even though a relatively high input current is required to transport liquid metal. DC-conduction-type electromagnetic pumps are used to transport liquid lithium for the creation of a thin liquid lithium metal film; for example, a linear accelerator requires the charge elimination of heavy ions by using a charge stripper having the form of thin liquid metal film. Geometrically, DC-conduction-type electromagnetic pumps are categorized into rectangular, cylindrical, and helical types, as shown in Fig. 1. The electromagnetic force is produced in the axial direction for rectangular and cylindrical types and in the azimuthal direction for helical type by the vector product of current density (J) and magnetic field (B), respectively. In the present study, these three types of DC electromagnetic pumps are comparatively investigated with regard to the developed pressure versus the input current.

1. Analysis. The DC electromagnetic pump has three major parts: an electrode stub, a permanent magnet, and a pump duct. In Fig. 1, the pressure in the pump channel is developed by the Lorentz force which is generated by the vector product of the current and the magnetic field. The current density can be expressed using Ohms law in Eq. (1), and the Lorentz force can be obtained with Eq. (2). The Lorentz force is included as an external term in the momentum equation of the Navier-Stokes equations, as in Eq. (3). Therefore, the developed pressure of the DC electromagnetic pump is analyzed by solving the coupled equations in Eqs. (1)–(3).

$$\mathbf{J}_t = \mathbf{J}_e + \sigma \mathbf{v} \times \mathbf{B}, \tag{1}$$

$$\mathbf{f} = \mathbf{J}_t \times \mathbf{B}, \tag{2}$$

$$\frac{\partial \mathbf{v}}{\partial t} + (\mathbf{v} \cdot \nabla)\,\mathbf{v} = -\frac{1}{\rho'}\nabla\left(P + P_h\right) + \nu\nabla^2\mathbf{v} + \frac{1}{\rho'}\mathbf{J}_t \times \mathbf{B}. \tag{3}$$

First, the Lorentz force is expressed as a function of the external current, electrical conductivity, velocity, and magnetic flux density by substituting Eq. (1)

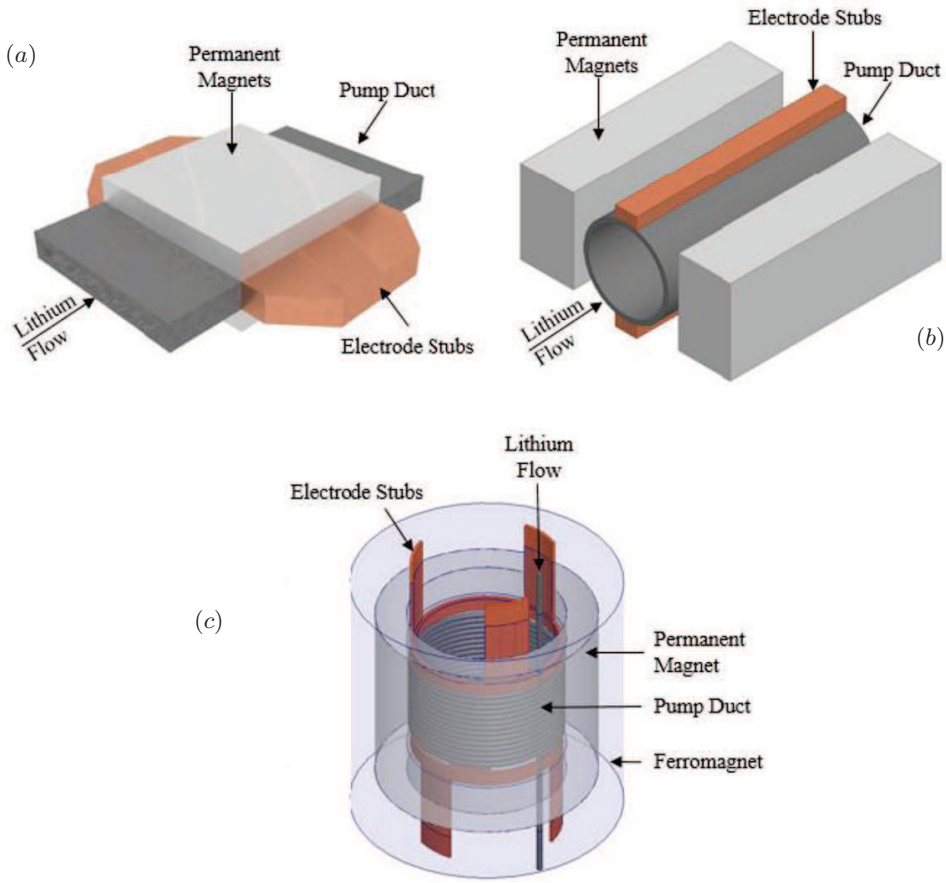

Fig. 1. Schematic presentation of (*a*) rectangular-, (*b*) cylindrical-, and (*c*) helical-type DC electromagnetic pumps. plane view and lateral view along the $x-$axis.

into Eq. (2), resulting in

$$\mathbf{f} = \mathbf{J}_{\mathrm{e}} \times \mathbf{B} + \sigma\left(\mathbf{v} \times \mathbf{B}\right) \times \mathbf{B}. \tag{4}$$

Eq. (3) is reduced to Eq. (5) for a steady-state incompressible liquid lithium flow, where the viscous term is negligible owing to the high Hartmann number of the electromagnetic pump. Therefore, the pressure gradient in the Navier-Stokes equation is expressed as a function of the current density and magnetic flux density:

$$\nabla P = \mathbf{J}_{\mathrm{t}} \times \mathbf{B} - \nabla P_{\mathrm{h}}. \tag{5}$$

The characteristics of the three types of electromagnetic pumps are analyzed by using equivalent electric circuit methods with the MHD information from Eq. (1)–(5).

The electric circuit methods [1] for rectangular- and cylindrical-type DC electromagnetic pumps are presented in Fig. 2. The electromotive force (EMF) and the resistance of the pump duct affect the force produced inside the liquid lithium. An equation for the rectangular-type DC electromagnetic pump is obtained by Kirchhoffs and Ohms laws to derive the developed pressure in the liquid lithium of the pump channel. From Kirchhoffs law, the vertical component of the current passing in the direction of the electrode stub and the total input current are

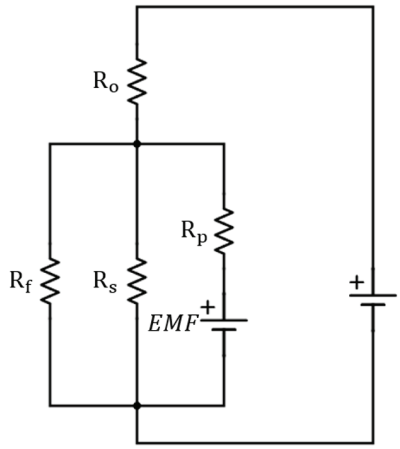

Fig. 2. Electrical equivalent circuit of the rectangular- and cylindrical-type DC electromagnetic pumps.

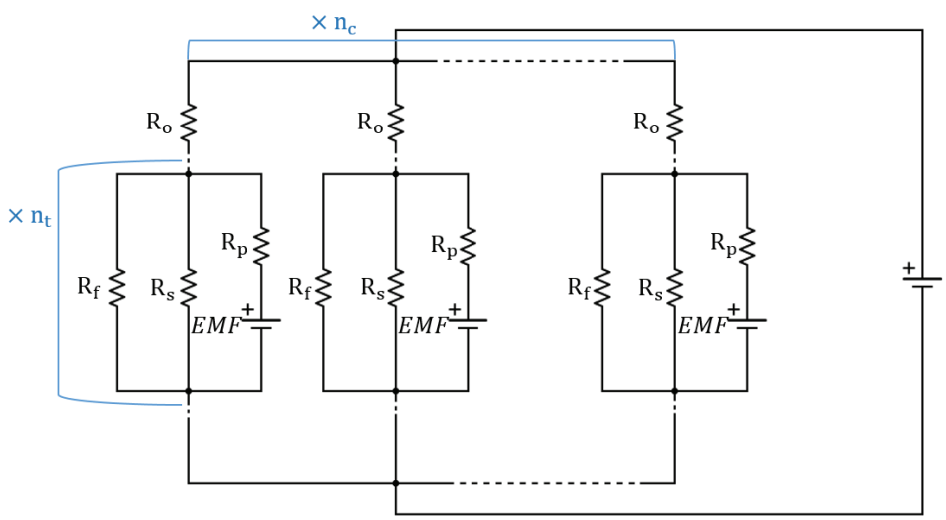

Fig. 3. Electrical equivalent circuit of the helical-type DC electromagnetic pump.

presented as

$$i_{\mathrm{ver}} = i_{\mathrm{f}} + i_{\mathrm{s}}, \tag{6}$$

$$i_{\mathrm{t}} = i_{\mathrm{p}} + i_{\mathrm{ver}}, \tag{7}$$

The resistance [2] in the direction vertical to the current flow is

$$\frac{1}{R_{\mathrm{ver}}} = \frac{1}{R_{\mathrm{f}}} + \frac{1}{R_{\mathrm{s}}}. \tag{8}$$

By applying Ohms law, the voltage is acquired according to the current path as

$$R_o i_{\mathrm{t}} + R_{\mathrm{ver}} i_{\mathrm{ver}} = R_o i_{\mathrm{t}} + R_{\mathrm{p}} i_{\mathrm{p}} + E_{\mathrm{p}} = V. \tag{9}$$

The EMF interrupts the force generated (voltage) according to the Lorentz principle, where it is opposite to the generated force (voltage), as follows

$$E_{\mathrm{p}} = BW_{\mathrm{d}} v. \tag{10}$$

The developed pressure is calculated by dividing the Lorentz force, which is the product of the magnetic flux density and the current and W_d, by the flow area $(H_\mathrm{d} \times W_\mathrm{d})$ as

$$\Delta P_\mathrm{L} = \frac{B}{H_\mathrm{d}} i_\mathrm{p}. \tag{11}$$

The current passing in the liquid lithium is obtained by combining Eqs. (7), (9), and (10) and eliminating the outer resistance and the vertical current flow

$$i_\mathrm{p} = \frac{R_\mathrm{ver} i_\mathrm{t} - B W_\mathrm{d} v}{R_\mathrm{p} + R_\mathrm{ver}}. \tag{12}$$

Moreover, the hydraulic pressure drop [3] is calculated by the Darcy-Weisbach formula:

$$\Delta P_\mathrm{h} = \frac{f_\mathrm{d} \rho L v^2 (W_\mathrm{d} + H_\mathrm{d})}{4 W_\mathrm{d} H_\mathrm{d}}. \tag{13}$$

The friction coefficient is expressed as a function of the Reynolds number

$$f_\mathrm{d} = \frac{64}{\mathrm{Re}}, \tag{14}$$

$$\frac{1}{\sqrt{f_\mathrm{d}}} = -1.8 \log_{10} \left[\frac{6.9}{\mathrm{Re}} + \left(\frac{\varepsilon_\mathrm{s}}{3.7 D} \right)^{1.11} \right] \tag{15}$$

for laminar and turbulent flow, respectively [5].

The developed pressure and the total input current of the rectangular-type DC electromagnetic pump are obtained by subtracting the hydraulic pressure drop in Eq. (13) from Eq. (11) and applying Eq. (12), which yields

$$\Delta P = \frac{B i_\mathrm{t} R_\mathrm{ver}}{(R_\mathrm{ver} + R_\mathrm{p}) H_\mathrm{d}} - \frac{B^2 Q}{(R_\mathrm{ver} + R_\mathrm{p}) H_\mathrm{d}^2} - \frac{f_\mathrm{d} \rho_\mathrm{lit} L v^2 (W_\mathrm{d} + H_\mathrm{d})}{4 W_\mathrm{d} H_\mathrm{d}}, \tag{16}$$

$$i_\mathrm{t} = \left(\Delta P + \frac{B^2 Q}{(R_\mathrm{ver} + R_\mathrm{p}) H_\mathrm{d}^2} + \frac{f_\mathrm{d} \rho_\mathrm{lit} L v^2 (W_\mathrm{d} + H_\mathrm{d})}{4 W_\mathrm{d} H_\mathrm{d}} \right) \frac{(R_\mathrm{ver} + R_\mathrm{p}) H_\mathrm{d}}{B R_\mathrm{ver}}. \tag{17}$$

The electric circuit of the cylindrical-type DC electromagnetic pump is the same as that of the rectangular-type pump, as shown in Fig. 2, because the solution method is the same, except for the cylindrical geometry. The developed pressure and the total input current of the cylindrical-type DC electromagnetic pump are

$$\Delta P = \frac{4 B i_\mathrm{t} R_\mathrm{ver}}{\pi (R_\mathrm{ver} + R_\mathrm{p}) D_\mathrm{i}} - \frac{16 B^2 Q}{\pi^2 (R_\mathrm{ver} + R_\mathrm{p}) D_\mathrm{i}^2} - \frac{f_\mathrm{d} \rho_\mathrm{lit} L v^2}{2 D_\mathrm{i}}, \tag{18}$$

$$i_\mathrm{t} = \left(\Delta P + \frac{16 B^2 Q}{\pi^2 (R_\mathrm{ver} + R_\mathrm{p}) D_\mathrm{i}^2} + \frac{f_\mathrm{d} \rho_\mathrm{lit} L v^2}{2 D_\mathrm{i}} \right) \frac{(R_\mathrm{ver} + R_\mathrm{p}) \pi D_\mathrm{i}}{4 B R_\mathrm{ver}}. \tag{19}$$

The electric circuit for the helical-type DC electromagnetic pump has multiple equivalent resistances due to several tubes that compose the pump duct and are connected to the electrode stub, as shown in Fig. 3. The total current flow is divided into multiple flows equal to the number of electrode stubs, and the developed pressure is multiplied by the number of wound pump ducts, which are helically rotated in Fig. 1, and is expressed as

$$\Delta P_\mathrm{L} = n_\mathrm{t} n_\mathrm{c} \frac{4 B i_\mathrm{ver}}{\pi D_\mathrm{i}}. \tag{20}$$

The helical geometry of the pump duct has an additional term due to the hydraulic pressure drop [4] because of its bent duct shape:

$$\Delta P_{\mathrm{h,minor}} = \frac{k_{\mathrm{L}}\rho_{\mathrm{lit}}v^2}{2}, \tag{21}$$

where

$$k_{\mathrm{L}} = 4n_{\mathrm{t}}\left(\frac{f_{\mathrm{r}}\pi D_{\mathrm{R}}}{8D_{\mathrm{i}}} + 0.5K_{\mathrm{l}}\right) + K_{\mathrm{l}}. \tag{22}$$

Therefore, the total developed pressure and the total input current of the helical-type DC electromagnetic pump read as

$$\Delta P = n_{\mathrm{t}}\left(\frac{4Bi_{\mathrm{t}}R_{\mathrm{ver}}}{\pi(R_{\mathrm{ver}}+R_{\mathrm{p}})D_{\mathrm{i}}} - \frac{16n_{\mathrm{c}}B^2Q}{\pi^2(R_{\mathrm{ver}}+R_{\mathrm{p}})D_{\mathrm{i}}^2}\right) - \frac{\pi n_{\mathrm{t}}D_{\mathrm{R}}f_{\mathrm{d}}\rho_{\mathrm{lit}}v^2}{2D_{\mathrm{i}}} - \frac{k_{\mathrm{L}}\rho_{\mathrm{lit}}v^2}{2}, \tag{23}$$

$$i_{\mathrm{t}} = \left(\Delta P + \frac{16n_{\mathrm{t}}n_{\mathrm{c}}B^2Q}{\pi^2(R_{\mathrm{ver}}+R_{\mathrm{p}})D_{\mathrm{i}}^2} + \frac{\pi f_{\mathrm{d}}\rho_{\mathrm{lit}}n_{\mathrm{t}}D_{\mathrm{r}}v^2}{2D_{\mathrm{i}}} + \frac{K_{\mathrm{L}}\rho_{\mathrm{lit}}v^2}{2}\right) \times \frac{(R_{\mathrm{ver}}+R_{\mathrm{p}})\pi D_{\mathrm{i}}}{4Bn_{\mathrm{t}}R_{\mathrm{ver}}}. \tag{24}$$

2. Results and discussion. The wall thickness of the rectangular type pump duct was 0.001 m (see Fig. 4). The permanent magnet thickness was restricted to 0.05 m due to machinability limitation. The magnetic flux density was decreased as the height of the pump was increased, whereas it had the maximum value at the specific width and length of the pump. The input current was proportional to the height of the rectangular pump duct when it was greater than 0.001 m, satisfying the machinability limitations in Fig. 4. Therefore, the width and the length of the rectangular pump ducts should be determined to optimize the input current in Fig. 5 and Fig. 6. The optimized input current of the rectangular pump was 2280 A when the width and length of the rectangular pump duct were 0.032 m and 0.08 m, respectively.

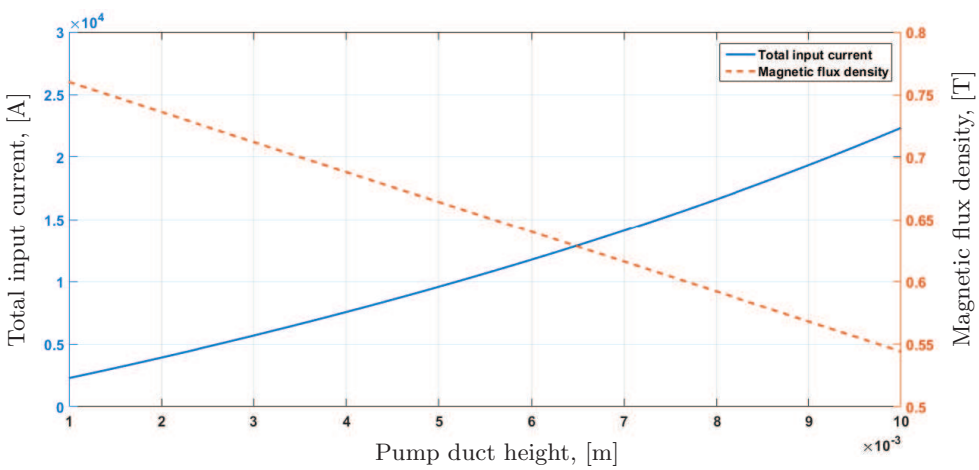

Fig. 4. Input current and magnetic flux density vs. the change of the height in the rectangular-type pump.

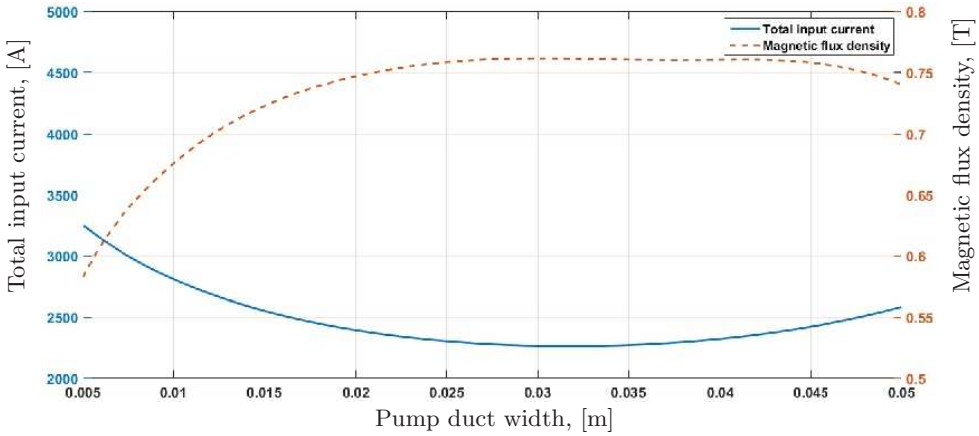

Fig. 5. Input current and magnetic flux density vs. the change of the width in the rectangular-type pump.

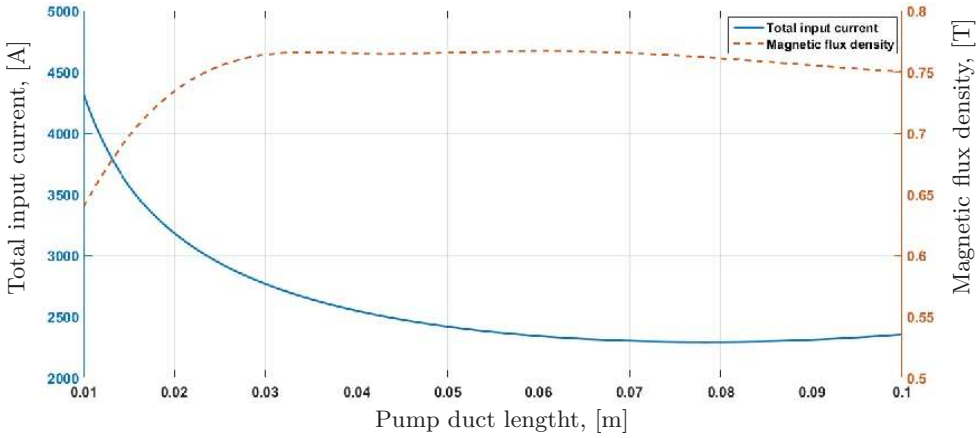

Fig. 6. Input current and magnetic flux density vs. the change of the length in the rectangular-type pump.

The wall thickness of the cylindrical pump duct was 0.001 m, which was as that of the rectangular pump. The length of the cylindrical pump duct was determined to be 0.05 m owing to the limit of the permissible current to the electrode stub. The input current versus the change in diameter of the cylindrical pump is shown in Fig. 7, where the input current is proportional to the inner diameter of the cylindrical pump. The minimum allowable size of the inner diameter of the cylindrical pump was restricted to 0.002 m owing to machinability limitations. Therefore, the required input current was 2089 A, which was by about 8.4% lower than that of the rectangular pump, for a developed pressure of 10 bar due to the higher magnetic flux density.

The helical pump has a force that multiplies the force at a single tube by the number of bent tubes inside the liquid lithium. Accordingly, the required input current is reduced, which is proportional to the number of turns of tubes in Fig. 8. The magnetic flux density of the helical pump was higher than that of the other pumps, where it was constant as 1 T, because the ferromagnet induced the magnetic flux path. The wall thickness of the pump duct was 0.001 m, which was as that of the rectangular pump. The input current attained its minimum value when the inner diameter of the tube was 0.002 m, resulting in an input current of

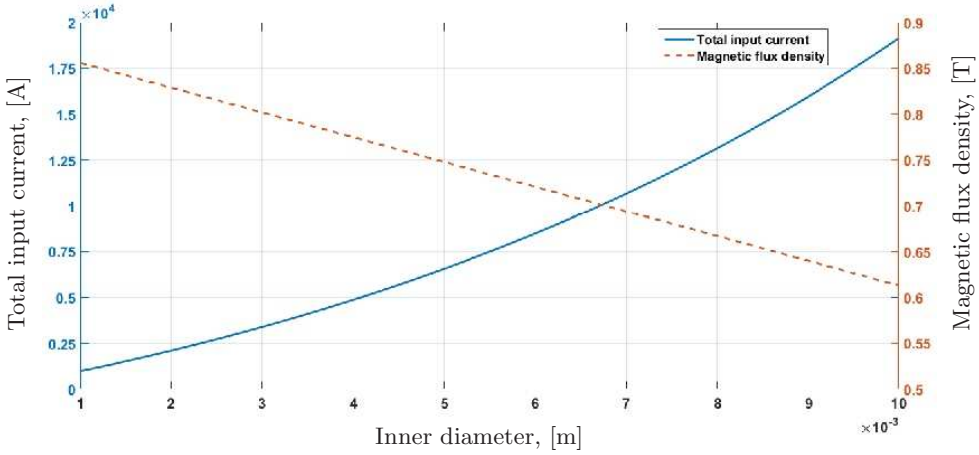

Fig. 7. Input current and magnetic flux density vs. the change of the inner diameter in the cylindrical-type.

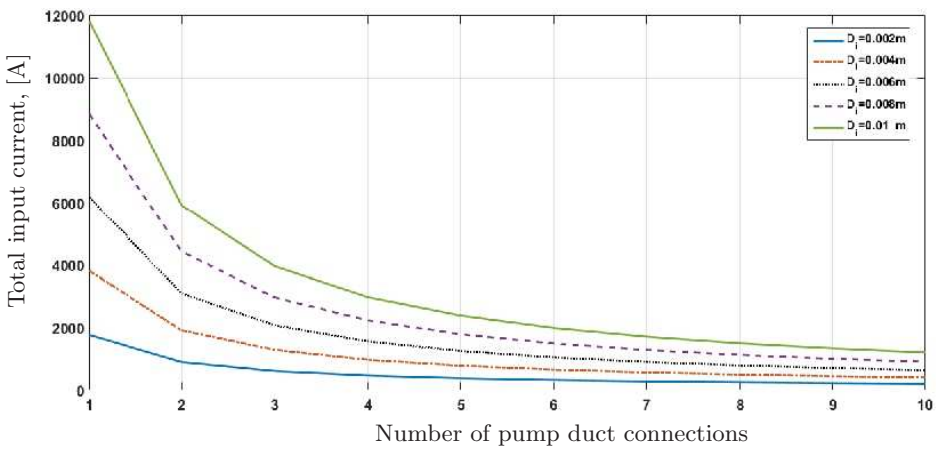

Fig. 8. Input current vs. the change of the number of tube turns in the helical-type pump.

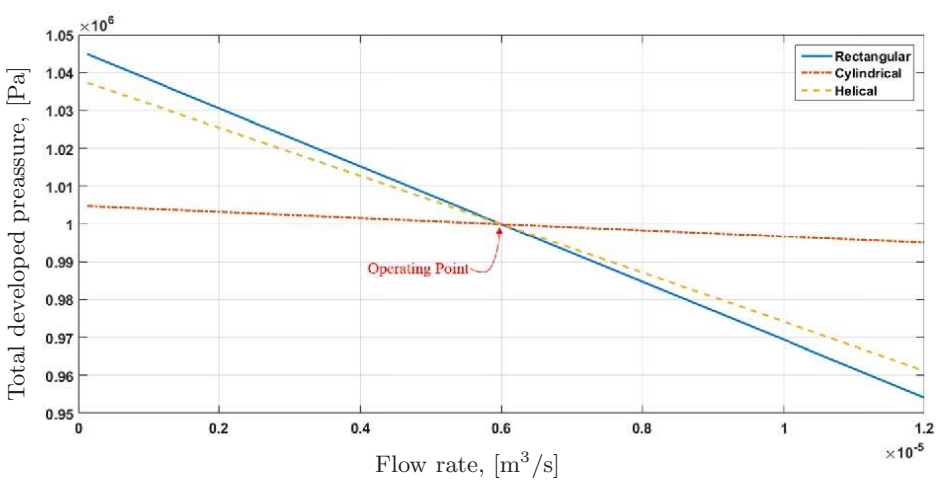

Fig. 9. Developed pressureflowrate curves of the three types of DC electromagnetic pumps.

Table 1. Design specifications of the rectangular-type DC electromagnetic pump.

	Design variable	Units	Value
Hydrodynamic	Flow rate Q	[m^3/s]	0.000006
	Developed pressure ΔP	[bar]	10
	Velocity v	[m/s]	0.19
	Reynolds number Re	–	406
	Hydraulic pressure loss ΔP_{h}	[bar]	0.00057
	EMF pressure loss ΔP_{e}	[bar]	0.12
Geometrical	Height H_{d}	[m]	0.001
	Width H_{d}	[m]	0.032
	Lenght L	[m]	0.08
Electrical	Input current i_{t}	[A]	2280
	Magnetic flux density B	[T]	0.76

Table 2. Design specifications of the cylindrical-type DC electromagnetic pump.

	Design variable	Units	Value
Hydrodynamic	Flow rate Q	[m^3/s]	0.000006
	Developed pressure ΔP	[bar]	10
	Velocity v	[m/s]	0.191
	Reynolds number Re	–	4266
	Hydraulic pressure loss ΔP_{h}	[bar]	0.0035
	EMF pressure loss ΔP_{e}	[bar]	0.031
Geometrical	Inner diameter D_{i}	[m]	0.002
	Lenght L	[m]	0.05
Electrical	Input current i_{t}	[A]	2089
	Magnetic flux density B	[T]	0.83

204 A. The input current was significantly lower than that of the rectangular and cylindrical pumps, where the maximum number of turns of the tube was limited to 10, considering the space in which the helical pump was to be installed.

The characteristics of the developed pressure and flowrate for the three types of pumps based on variable optimization are shown in Fig. 9. The rectangular- and helical-type pumps were thought to be more stable than the cylindrical-type pump, considering that the slopes were negative at all flowrates. The hydrodynamic, geometrical, and electrical design variables of the three types of electromagnetic pumps are summarized in Tables 1–3. The Lorentz force of the helical-type electromagnetic pump was 10–12 times higher than that of the rectangular- and cylindrical-type pumps, with the same input current because of the parallel connection of the pump duct geometry and higher magnetic flux density. However, the pressure loss of the helical-type pump was 14–52 times higher than that of the rectangular- and cylindrical-type pumps. As a result, the input current of the helical-type DC electromagnetic pump was found to be the lowest – about 9% of the rectangular- and cylindrical-type pumps – for the requirements of a flowrate of 6 cc/s and a developed pressure of 10 bar.

3. Conclusion. Three types of DC electromagnetic pumps with a flow rate of 6 cc/s and a developed pressure of 10 bar were compared and analyzed for the transport of liquid lithium for a charge stripper at a temperature of 300°C. It was

Table 3. Design specifications of the helical-type DC electromagnetic pump.

	Design variable	Units	Value
Hydrodynamic	Flow rate Q	[m^3/s]	0.000006
	Developed pressure ΔP	[bar]	10
	Velocity v	[m/s]	1.91
	Reynolds number Re	–	4266
	Hydraulic pressure loss ΔP_{h}	[bar]	0.38
	EMF pressure loss ΔP_{e}	[bar]	1.36
Geometrical	Inner diameter D_{i}	[m]	0.002
	Overall diameter D_{r}	[m]	0.172
	Number of connections n_{t}	–	10
	Number of electrode stubs n_{c}	–	3
Electrical	Input current i_{t}	[A]	204
	Magnetic flux density b	[T]	1

thought that the helical-type DC electromagnetic pump could be most effectively used for the liquid lithium transport because it has the lowest input current among the three types of DC electromagnetic pumps.

References

[1] B.K. Nashine, S.K. Dash, K. Gurumurthy *et al.* Performance testing of indigenously developed DC conduction pump for sodium cooled fast reactor. *Indian J. Eng. Mater. Sci.*, vol. 14 (2007), pp. 209–214.

[2] R.S. Baker and M.J. Tessier. *Handbook of Electromagnetic Pump Technology* (Elsevier, New York, 1987).

[3] S.J. Zinkle. Summary of physical properties for lithium, Pb-17Li, and $(\mathrm{LiF})_{\mathrm{n}}\mathrm{BeF}_2$ coolants. In: *APEX Study Meeting, 1998*.

[4] Crane Co. *Flow of Fluids through Valves, Fittings, and Pipe* (Crane Co., Chicago, 1988).

[5] S.E. Haaland. Simple and explicit formulas for the friction factor in turbulent pipe flow. *J. Fluids Eng.*, vol. 105 (1983), pp. 89–90.

Received 14.01.2017